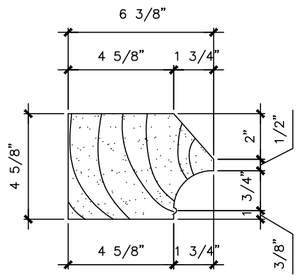

WDW. SURROUND CAST STONE PROFILE (14)

SCALE: 1-1/2"=1'-0"

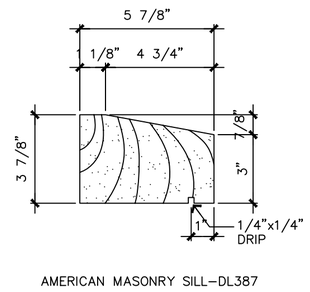

WDW. SILL CAST STONE PROFILE (13)

SCALE: 3"=1'-0"

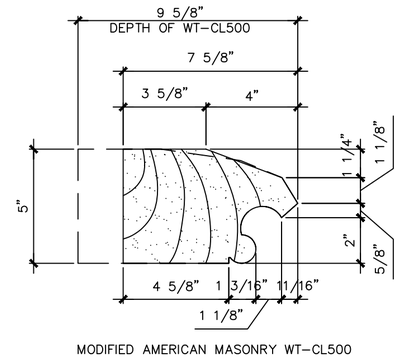

WATERTABLE CAST STONE PROFILE (12)

SCALE: 3"=1'-0"

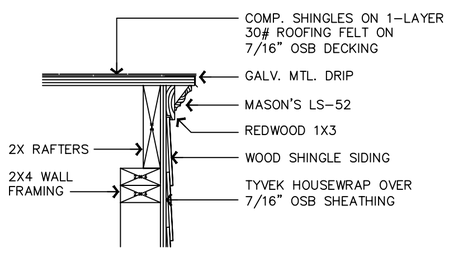

TYP. RAKE DETAIL AT WD. SHINGLE WALL (11)

SCALE: 1-1/2"=1'-0"

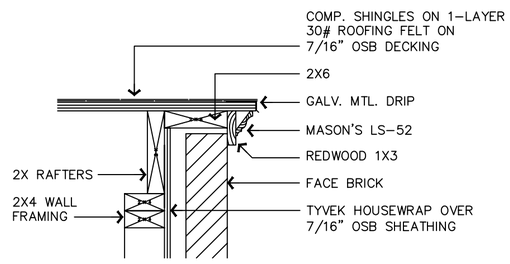

TYP. RAKE DETAIL AT MASONRY WALL (10)

SCALE: 1-1/2"=1'-0"

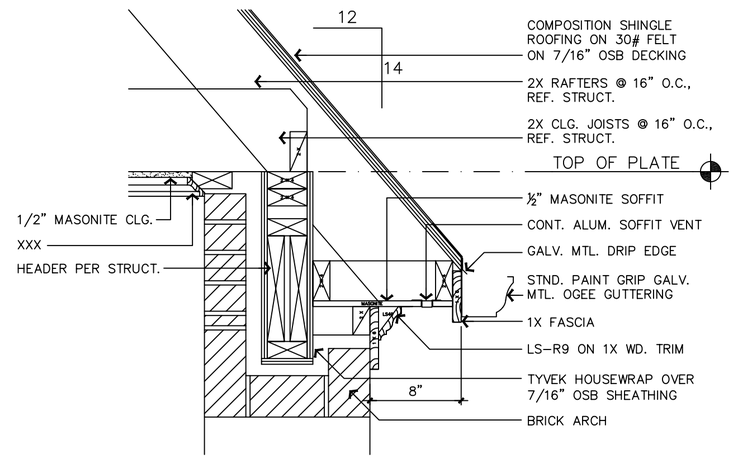

EAVE DETAIL 9 - AT COVERED PORCH VERANDA EAVE SIMILAR (09)

SCALE: 1-1/2"=1'-0"

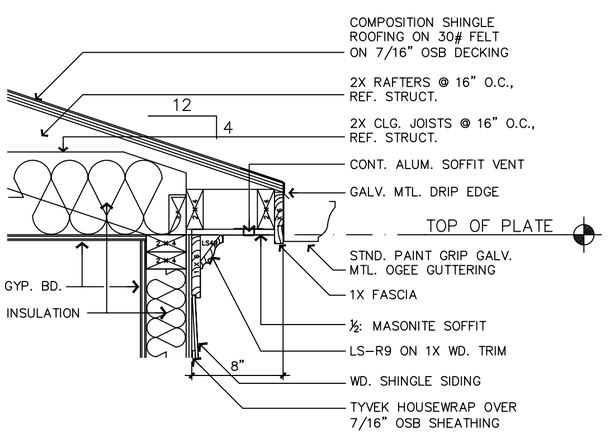

EAVE DETAIL 7 - 4:12 w/ NO MASONRY (07)

SCALE: 1-1/2"=1'-0"

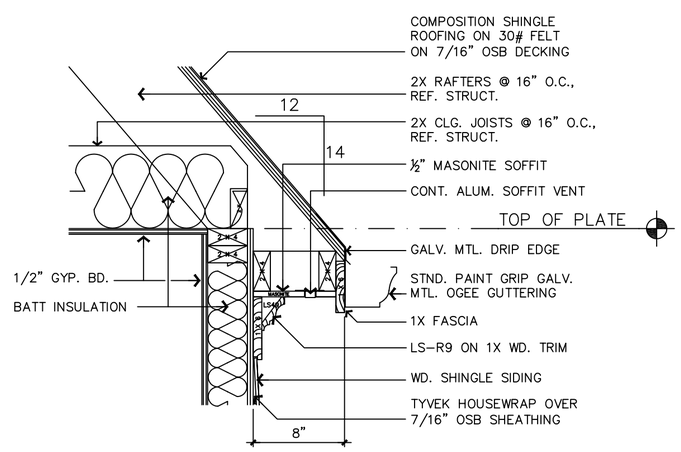

EAVE DETAIL 6 - 14:12 w/ NO MASONRY (06)

SCALE: 1-1/2"=1'-0"

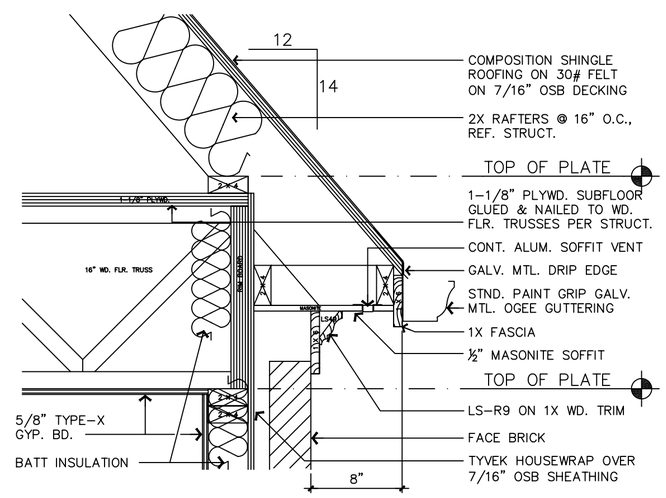

EAVE DETAIL 5 - AT GARAGE (05)

SCALE: 1-1/2"=1'-0"

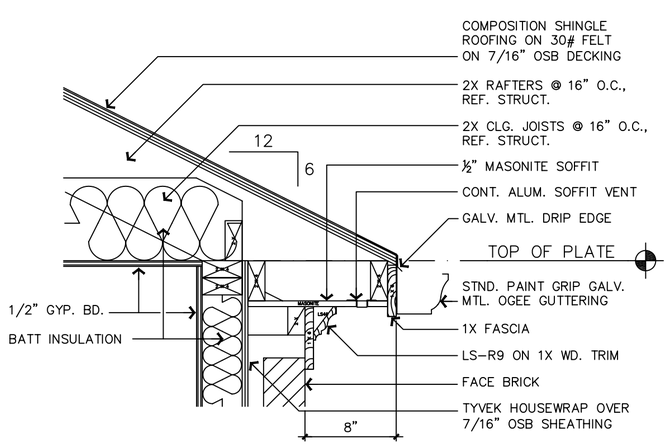

EAVE DETAIL 3 - AT 6:12 ROOF (03)

SCALE: 1-1/2"=1'-0"

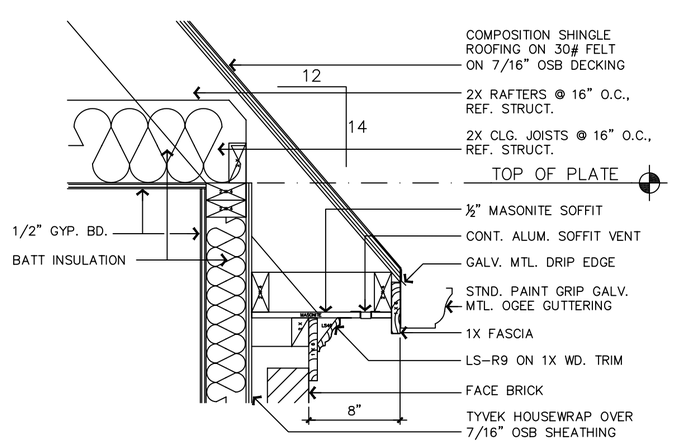

EAVE DETAIL 2 - AT 14:12 ROOF (02)

SCALE: 1-1/2"=1'-0"

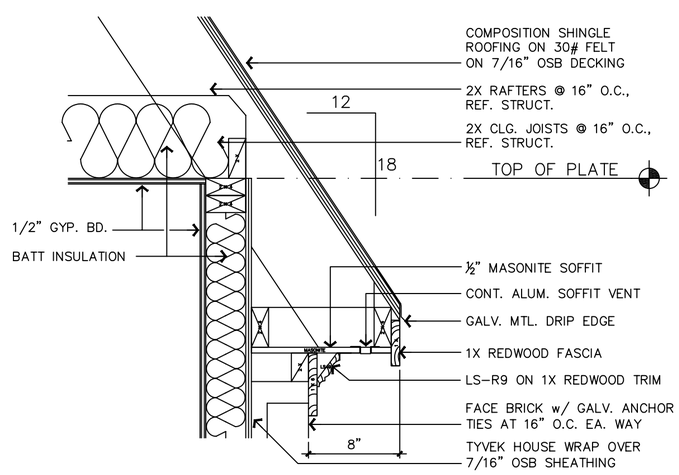

EAVE DETAIL 1 - AT 18:12 ROOF (01)

SCALE: 1-1/2"=1'-0"